Installation Instructions

Evolution® Tool-Less & Adjustable Cable Distribution Spool

Intended Use

The Tool-Less & Adjustable Cable Distribution Spools provide cable slack management and strain relief inside EvolutionÈ Vertical Cable Managers.

Parts Included

Adjustable Cable Spool, 3 ea.

Spool Installation

1. The cable distribution spools attach to the fixed accessory panels on the Single-Sided Cable Managers, the movable accessory panels on the Double-Sided Cable Managers, and the cable rings on Combination Cable Managers.

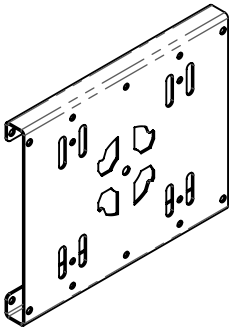

Fixed Accessory Panel Kit

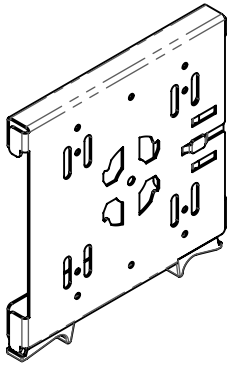

Movable Mid-Section Kit

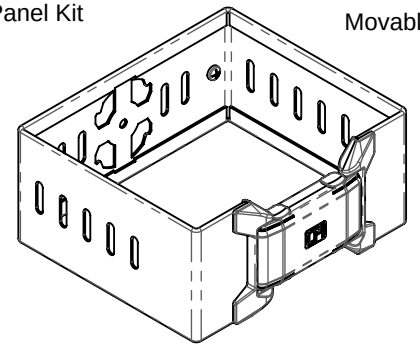

Cable Ring Kit

Spool Installation

2. Align the spool mounting posts with the cutouts on the accessory panel or ring.

3. Insert the posts through the cutouts.

4. Rotate the spool clockwise until it locks in place. **Note:** Grasp the spool at the base when rotating, not the spool flange.

5. If desired, a second spool can be mounted on the opposite side of the panel, see sheet 2.

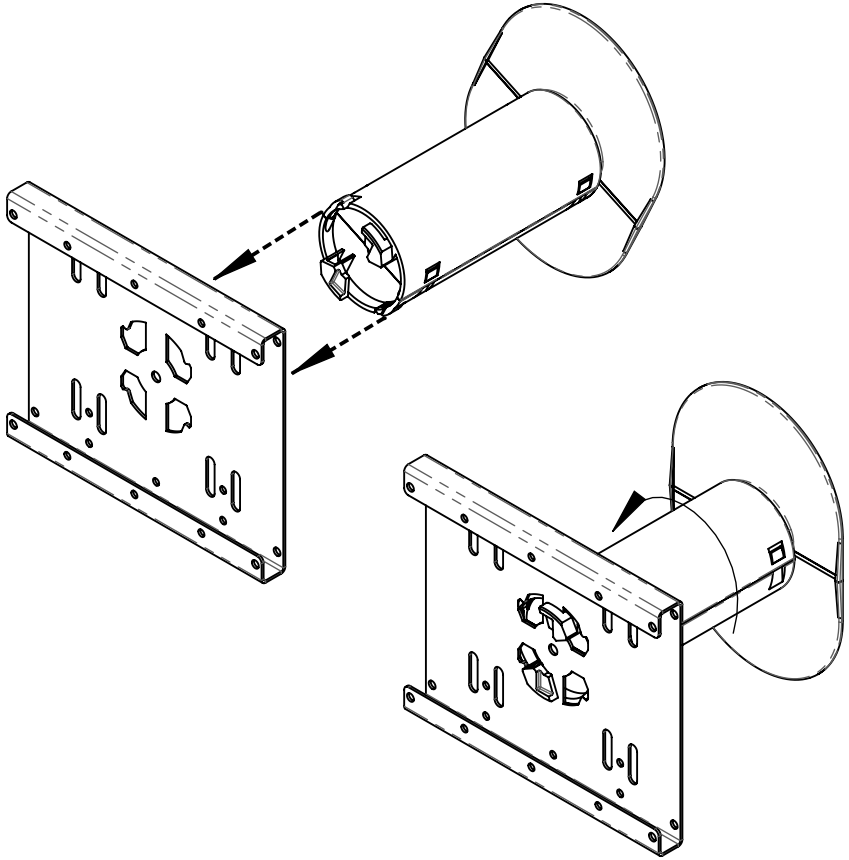

IIS-716008-001, 8/29/23, Rev. 1, CPI/BDK

800-834-4969 (USA & Canada) Åwww.chatsworth.com Åtechsupport@chatsworth.com

For international phone numbers, see our website or contact CPI Tech Support.

This drawing contains proprietary and confidential information and is protected by U.S. and international law. Unauthorized reproduction, disclosure or use of the drawing or the information therein is expressly forbidden except as agreed to in writing by Chatsworth Products, Inc.

Evolution® Tool-Less & Adjustable Cable Distribution Spool

Spool Removal

1. Squeeze the two locking tabs inward at the base of the spool.
2. Rotate the spool counterclockwise.
3. Pull the spool out of the cutout.

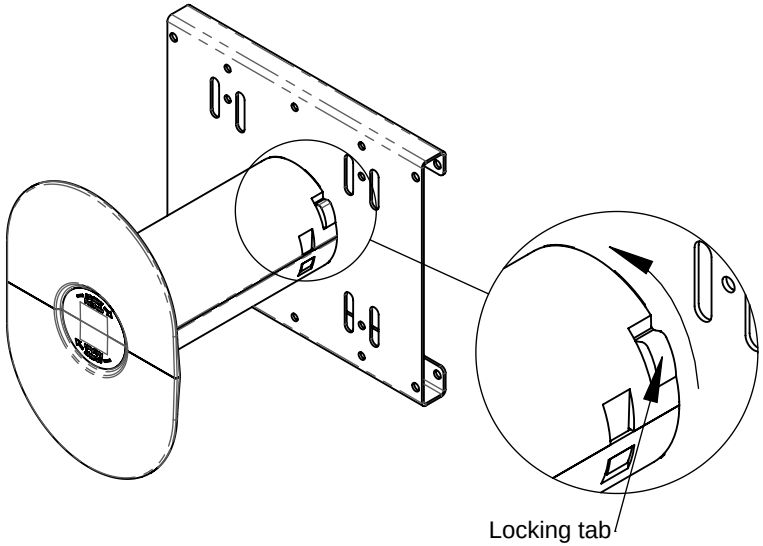

Adjusting Spool Length
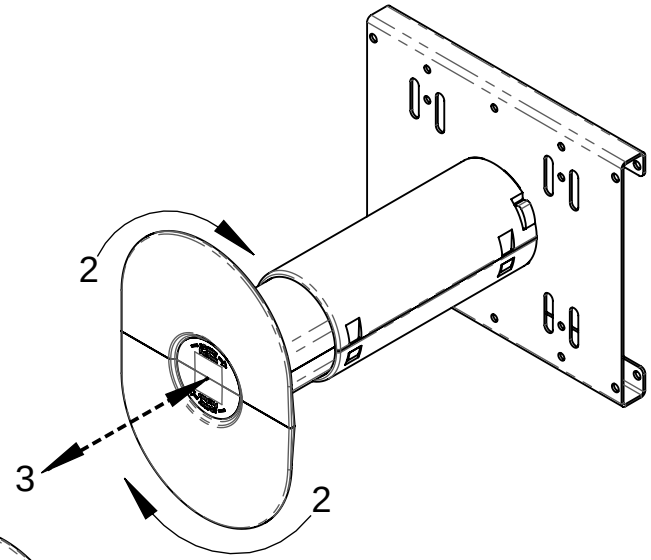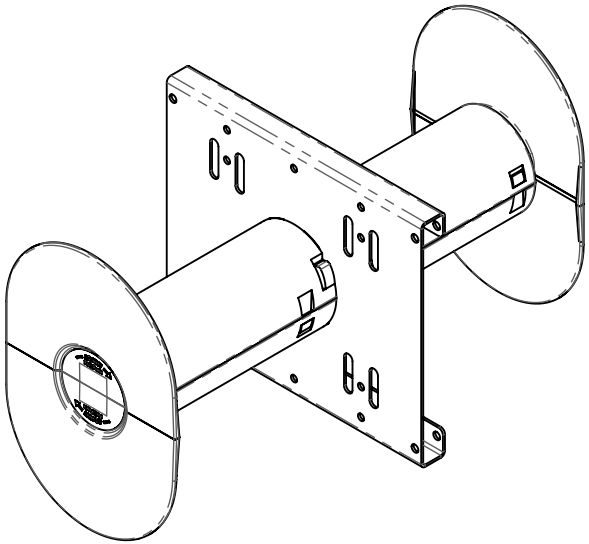
1. The spool length can be adjusted from 6" to 10.25" long in 1/4" increments.
2. Hold the spool flange and twist it clockwise, about 10 degrees, to unlock it.
3. While holding the spool flange in the unlocked position, push or pull the spool to the desired length and release to lock it in place.