Installation Instructions

Evolution® Two-Piece Side Panel Kits

Intended Use

The Double-Sided Side Panel kit is intended to be used in the Evolution® Double-Sided Cable Manager only. Ensure you have the correct Side Panel height to match the manager height.

Parts Included

Side Panel Kit, 2 ea.
M6 Wingnut, 4 ea.
M6 Washer, 4 ea.

Installation

The Two-Piece Side Panel kit upper panel hangs on the top of the manager and is secured by mounting the lower panel using the included hardware.

1. Hang upper Side Panel first, using the manager horizontal tube to locate the center.

2. Insert the lower Side Panel studs through the designated holes in the manager. The upper Side Panel lances should be used for locating the manager holes.

3. Fasten the lower Side Panel using the M6 Wingnuts (4 total) and M6 Washers (4 total) from inside of the manager.

Double-Sided

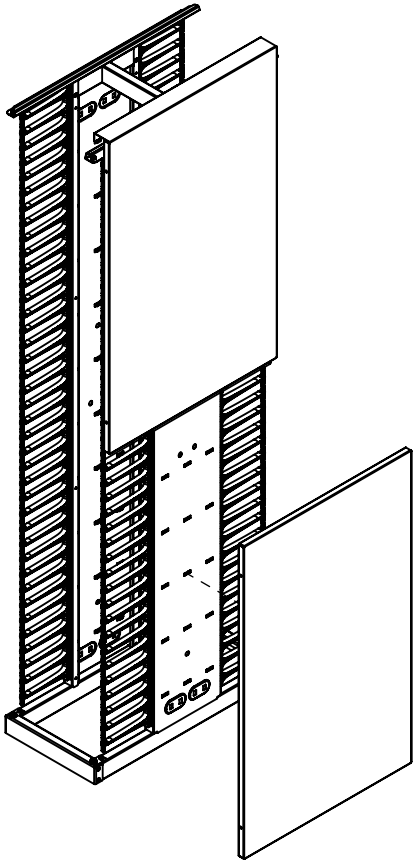

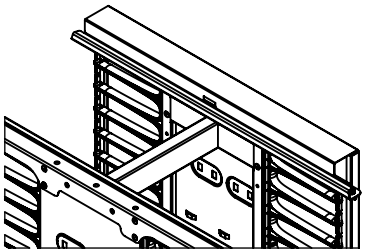

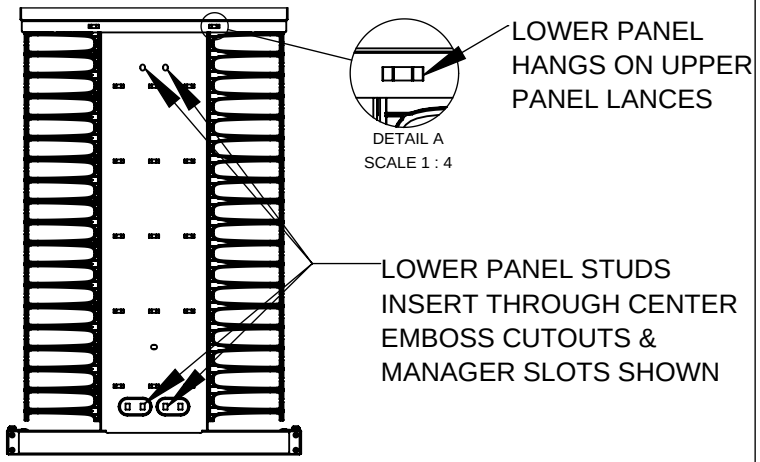

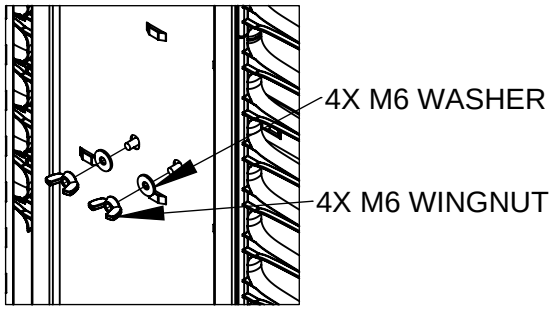

CHATSWORTH PRODUCTS

IIS-733551, 01/24/24, Rev. 2, CPI/BJ
800-834-4969 (USA & Canada) Åwww.chatsworth.com Åtechsupport@chatsworth.com
For international phone numbers, see our website or contact CPI Tech Support.

This drawing contains proprietary and confidential information and is protected by U.S. and international law. Unauthorized reproduction, disclosure or use of the drawing or the information therein is expressly forbidden except as agreed to in writing by Chatsworth Products, Inc.

Installation Instructions

Evolution® Two-Piece Side Panel Kits

Intended Use

The Single-Sided Side Panel is intended to be used in the Evolution® Single-Sided or Combination Style Cable Managers only. Ensure you have the correct Side Panel height to match the manager height.

Parts Included

Side Panel Kit, 2 ea.
M6 Wingnut, 4 ea.
M6 Washer, 4 ea.

Installation

The Two-Piece Side Panel kit upper panel hangs on the top of the manager and is secured by mounting the lower panel using the included hardware.

1. Hang upper Side Panel first, using the manager horizontal tube to locate the center.

2. Insert the lower Side Panel studs through the designated holes in the manager. The upper Side Panel lance should be used for locating the manager holes.

3. Fasten the lower Side Panel using the M6 Wingnuts (4 total) and M6 Washers (4 total) from inside of the manager.

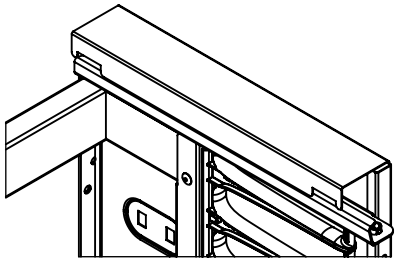

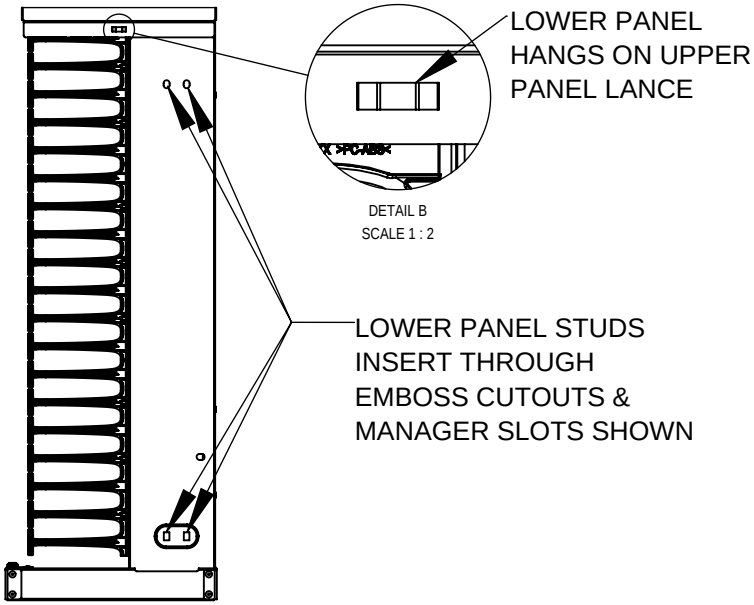

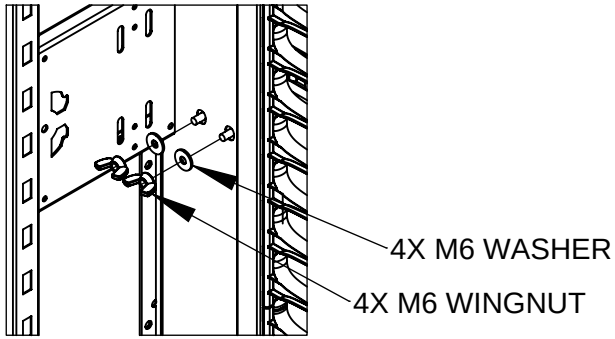
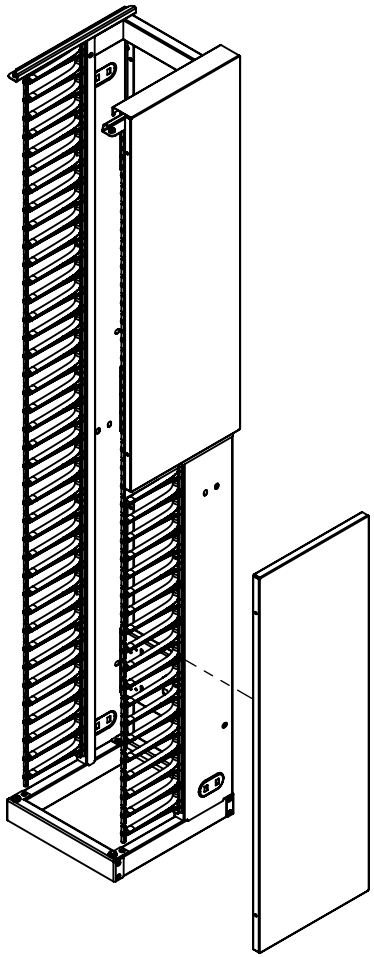
Single-Sided