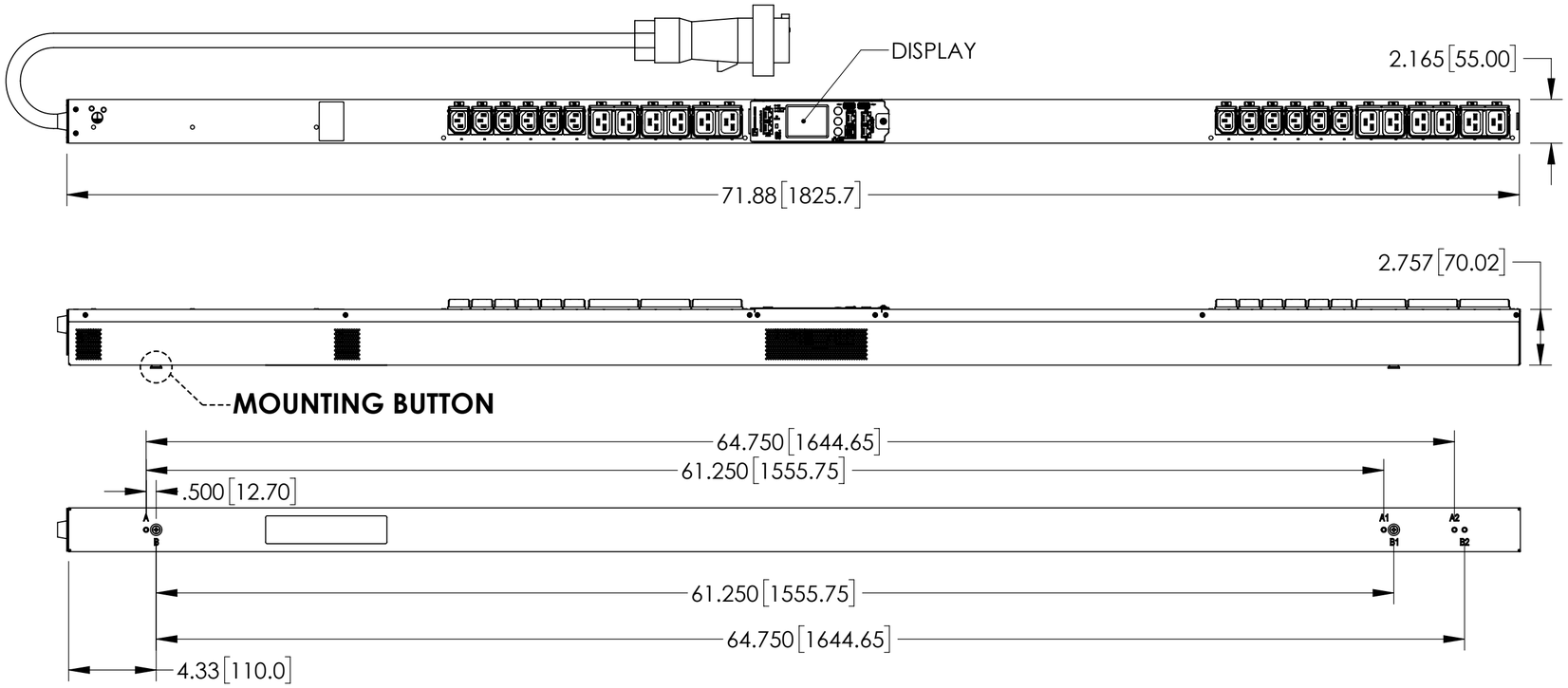

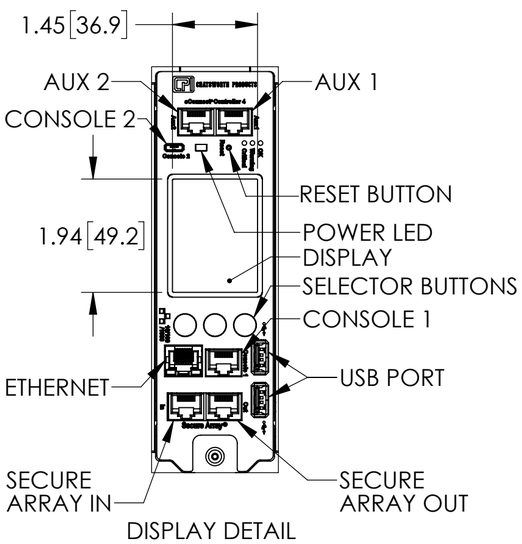

DISPLAY DETAIL

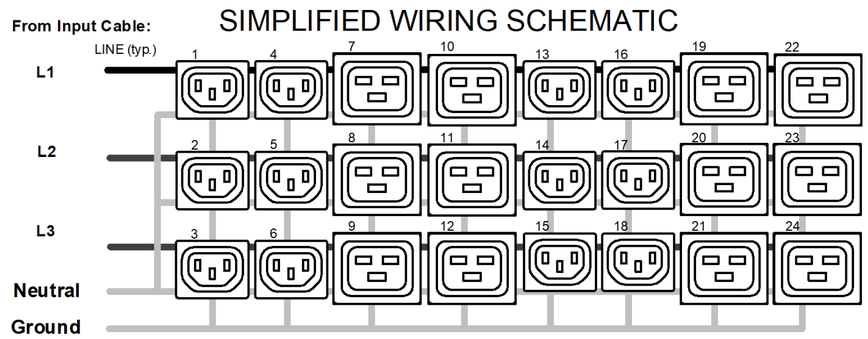

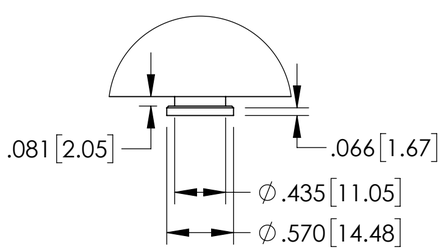

MOUNTING BUTTON DETAIL

INPUT PLUG DETAIL
IEC60309 6H
16A / 4P5W

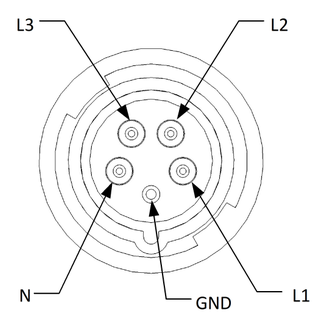

Technical Specs:	
Input Ratings	
Nominal Voltage (VAC)	220-240V/380-415V 3ph
Input Plug / Cord	516P6/520P6 (IP67), 10 ft. Cord
Current Rating	16A per phase
Power Rating (kW)	11.52
Output Ratings	
Nominal Voltage (VAC)	220-240V
Current Rating	48A
Outlet Rating	C13 10A max, C19 16A max
Max Current per Breaker	N/A Balanced; N/A Unbalanced
Outlet Combination	
Load Segment	Refer to Simplified Wire Schematic
PDU Total	(12)C13 (12)C19
Branch Circuit Protection	(0) No Breaker
Features:	
Local Display	(1) LCD Display - Branch Monitoring, IP Setup, Alarm Notification, Auto-Oriented
Branch Monitoring	Current, Voltage, Power, PF per Circuit
Outlet Monitoring	Not Supported
Monitoring Accuracy	+/- 1% True RMS
Ethernet Port	10/100/1000 Mbps RJ45
Remote Monitoring	GUI, SNMP v1-3,RS232, RESTful API, Power IQ
Remote Control	ON/OFF/CYCLE outlets remotely
IP Consolidation	Link up to 32 PDUs under a single IP Address
USB Ports (2)	Update firmware, Opt'l Temp/Humidity Sensor
Controller Module	Field Replaceable
Auxiliary Port (2)	Opt'l Front and Rear Electric Door Lock
Cord Retention	Locking Receptacles
Mounting System	Multiple tool-less mounting button locations, A and B (see detail)
Dimensions & Weights:	
Width (In[mm])	2.2[55]
Height (In[mm])	71.9[1827]
Depth (In[mm])	2.8[70.1]
Weight (lbs[kg])	18[8.2]
Regulatory Information:	NEMKO Listed to UL/IEC 62368-1, CE, RoHS, FCC Part 15 Class A, EN 55022
Regulatory Part Number:	K50-0Y610-40C-72A
Environmental Conditions:	
Operating Temperature	32 - 149F (0 - 65C)@ Input Pwr Rating (kW)
Operating Rel Humidity	5 - 95%
Operating Elevation	0-10000 ft (0-3000 m)
Storage Temperature	-13 - 149F (-25 - 65C)
Storage Rel Humidity	5 - 95%
Storage Elevation	0-50000ft (0-15000m)
Hardware Included:	(2) tool-less pre-installed mounting buttons (1) ground kit cable
Warranty:	3 yrs. Standard, 2 add'l yrs Opt'l
Optional Accessories:	Temp & Humidity Sensor, Electronic Locks

Notes:
1 All Dimension are in inches [millimeters] unless otherwise specified
2 Installation must conform with all related national and local codes
3 All Bracket kits are sold separately. Toolless mounting buttons are included for installation in CPI cabinets.
4 For more information, please contact Tech Support at techsupport@chatsworth.com

©2019 Chatsworth Products, Inc.
All rights reserved.

All products quoted are subject to availability based on manufacturing capacity and shipping dates should be considered estimates only.

While every effort has been made to ensure the accuracy of all information, CPI does not accept liability for any errors or omissions and reserves the right to change information and descriptions of listed services and products.

CHATSWORTH PRODUCTS, INC.

eConnect Vertical PDU, Switched,
IEC 60309 16A 3P+N+E, 10ft (3m),
220-240/380-415V Three Phase Input, 16A,
(12) C13 (12) C19 Outlets, 220-240V Output

THIRD ANGLE

EA-5030-X

SHEET 1 OF 1

ISS 1