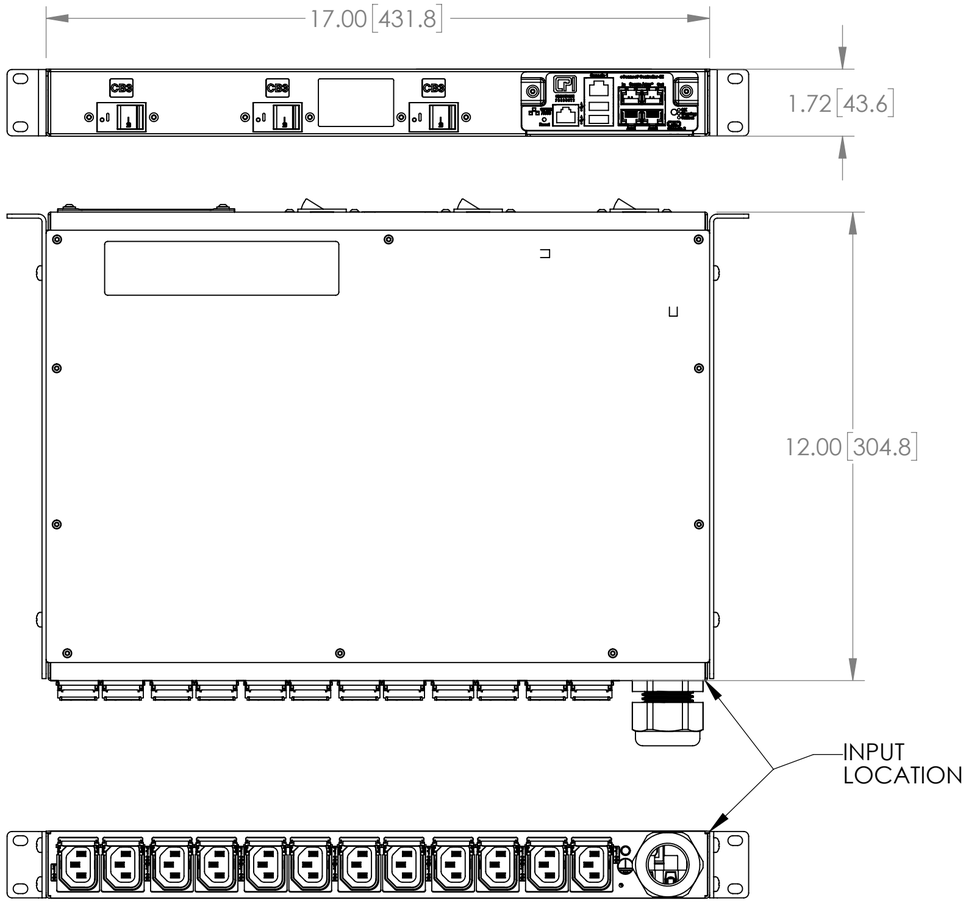

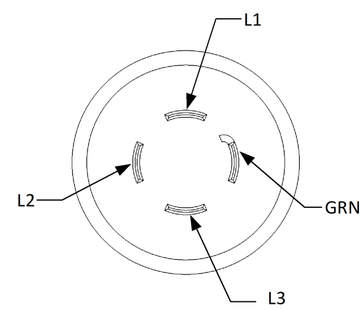

INPUT PLUG DETAIL
NEMA L15-30
30A / 3P4W

Technical Specs:	
Input Ratings	
Nominal Voltage (VAC)	208V 3ph
Input Plug / Cord	NEMA L15-30P
Current Rating	24A per phase
Power Rating (kW)	8.63
Output Ratings	
Nominal Voltage (VAC)	208V
Current Rating	41.5A
Outlet Rating	C13 10A max
Max Current per Breaker	13.8A Balanced; 20A Unbalanced
Outlet Combination	
Load Segment	Refer to Simplified Wire Schematic
PDU Total	(12)C13
Branch Circuit Protection	(3) 20A, 5kAIC, Double Pole
Surge Suppression	None
Features:	
Branch Monitoring	Current, Voltage, Power, PF per Circuit
Outlet Monitoring	Not Supported
Monitoring Accuracy	+/- 1% True RMS
Ethernet Port	10/100/1000 Mbps RJ45
Remote Monitoring	GUI,SNMP v1-3,RS232,RESTful API, CLI, Power IQ
Remote Control	Not Supported
IP Consolidation	Link 32/48 (with/without electronic locks) PDU's per IP address
USB Ports (2)	Update firmware, Opt'l Temp/Humidity Sensor
Controller Module	Field Replaceable
Auxiliary Port (2)	Optional Front & Rear Door Electronic Locks
Cord Retention	Locking Receptacles
Mounting System	Pre-installed Mounting brackets
Dimensions & Weights:	
Width (In[mm])	17[431.8]
Height (In[mm])	1.72[43.69]
Depth (In[mm])	12[304.8]
Weight (lbs[kg])	18[8.2]
Regulatory Compliance:	NEMKO Listed to UL/IEC 62368-1, CE, RoHS, FCC Part 15 Class A, EN 55022
Regulatory Part Number:	K32-3D136-002-72A
Environmental Conditions:	
Operating Temperature	32 - 149F (0 - 65C)@ Input Pwr Rating (kW)
Operating Rel Humidity	5 - 95%
Operating Elevation	0-10000 ft (0-3000 m)
Storage Temperature	-13 - 149F (-25 - 65C)
Storage Rel Humidity	5 - 95%
Storage Elevation	0-50000ft (0-15000m)
Hardware Included:	(2) Pre-installed mounting brackets (1) gound kit cable
Warranty	3 yrs. Standard, 2 add'l yrs. Opt'l
Optional Accessories:	Temp & Humidity Sensor, Electronic locks

SIMPLIFIED WIRING SCHEMATIC

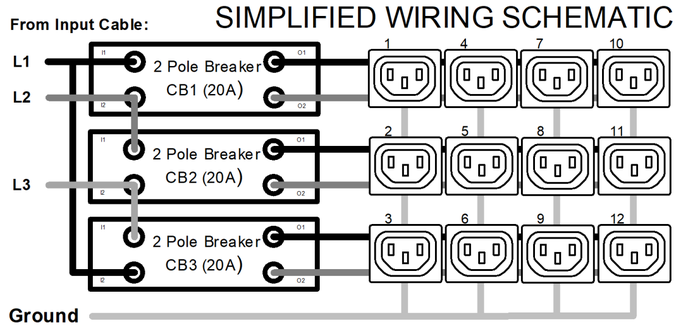

CONTROL MODULE DETAIL

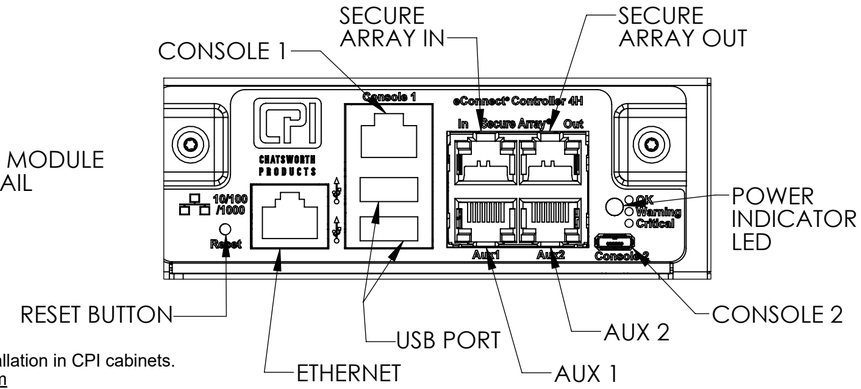

Notes:
1 All Dimension are in inches [millimeters] unless otherwise specified
2 Installation must conform with all related national and local codes
3 All Bracket kits are sold separately. Toolless mounting buttons are included for installation in CPI cabinets.
4 For more information, please contact Tech Support at techsupport@chatsworth.com

©2021 Chatsworth Products, Inc.
All rights reserved.

All products quoted are subject to availability based on manufacturing capacity and shipping dates should be considered estimates only.

While every effort has been made to ensure the accuracy of all information, CPI does not accept liability for any errors or omissions and reserves the right to change information and descriptions of listed services and products.

CHATSWORTH PRODUCTS, INC.

eConnect Horizontal 1U PDU, Monitored,
L15-30, 10ft (3m),
208V Three Phase Input, 30A,
(12) C13 Outlets, 208V Output

THIRD ANGLE

EA-3247-X

ISS

SHEET 1 OF 1