REVISION HISTORY				
ZONE	REV	DESCRIPTION	DATE	APPROVED
All	1	Released	3/26/2018	RLC

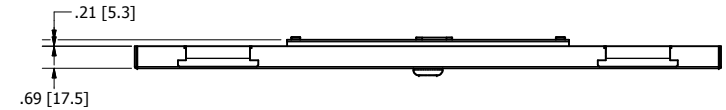

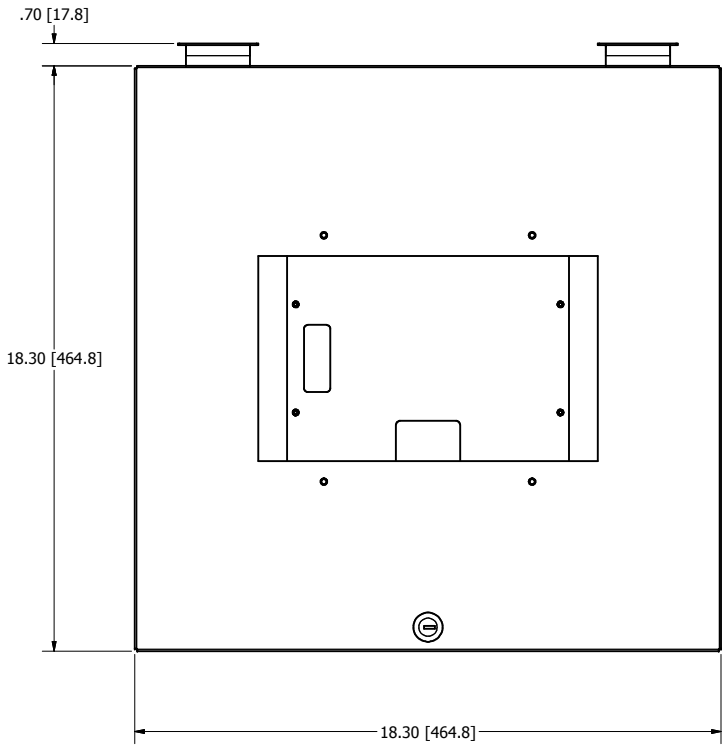

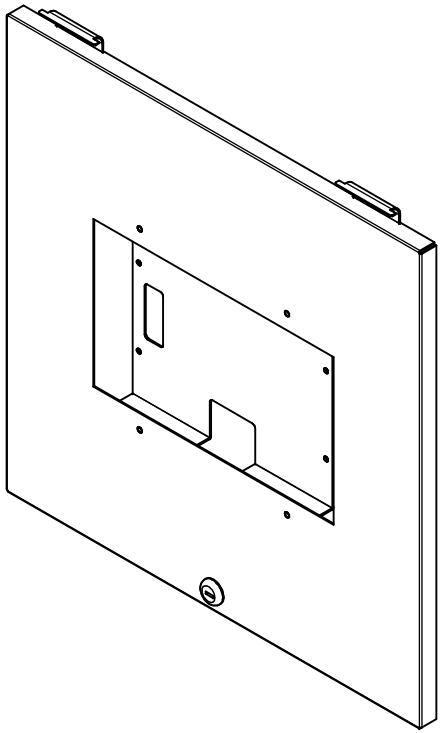

NOTES:

-Weight: 4 lbs.

-Material: 18 Gauge Steel Door White Powder Coat
20 Gauge Galvanized Steel Mounting Plate

Includes:

-Installation Hardware Specific to Access Point

NOTE: All materials used in the construction of Oberon products must be RoHS compliant and meet RoHS2 Directive 2011/65/EU. Contact Oberon engineering if RoHS compliant materials are not available.

DRAWN RLC	3/26/2018	Oberon, Inc. - 1315 S. Allen St. - State College, PA 16801
CHECKED RLC	3/26/2018	TITLE
QA		Model 38-47-MR42 / 38-47-MR52
MFG RLC	3/26/2018	
APPROVED RLC	3/26/2018	
TOLERANCE:	.0 = +/- .030 .00 = +/- .015 .000 = +/- .005	SIZE C · DWG NO 3509 / 3497 · REV 1
		SCALE · SHEET 1 OF 1