CHATSWORTH PRODUCTS

PRODUCT SPEC SHEET

Rack Line-Up Spacer

Rack Line-Up Spacer
Bolts and spacer securely attach two racks mounted side-by-side.

Universal Rack Kit consists of:
- (2) spacer plates 1″ x 3″ x 1/8″ (30 mm x 80 mm x 3.18 mm) thick aluminum
- (4) 5/16-18 x 2″ hex cap screws
- (4) 5/16-18 hex nuts
- (8) 5/16 plain washers

Standard Rack Kit consists of:
- (2) spacer plates 1″ x 3″ x 1/8″ (30 mm x 80 mm x 3.18 mm) thick aluminum
- (4) 1/2-20 x 1″ hex cap screws
- (4) 1/2-20 hex nuts
- (4) 1/2 plain washers.

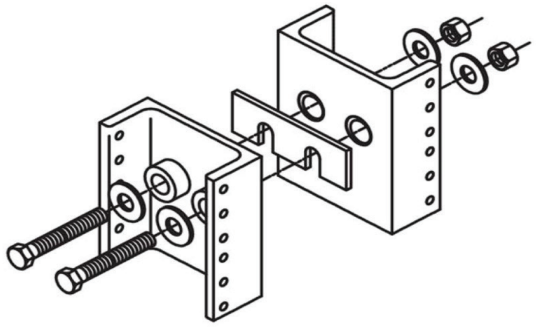

ORDERING INFORMATION

Part Number	Description	Shipping Weight lb (kg)
40602-X00	Rack Line-Up Spacer, Universal Rack	1 (0.5)
40702-X01	Rack Line-Up Spacer, Standard Rack	1 (0.5)

X=color: 1=Gray,5=Clear, 7=Black, E=Glacier White

United States & Canada
Simi Valley, CA
800-834-4969
Toronto, Ontario, Canada
+905-850-7770
chatsworth.com
techsupport@chatsworth.com

Latin America
Mexico City, Mexico
+52-55-5203-7525
Toll Free within Mexico
800-201-7592
chatsworth.com.co

Europe
Buckinghamshire
England, UK
+44-1628-524-834

Middle East & Africa
Dubai, UAE
+971-4-2602125
Doha, Qatar
+974-4-267422

Asia Pacific
Jing'an District,
Shanghai, China
+86 21 6880-0266
chatsworth.com.cn

©2024 Chatsworth Products. All rights reserved. 03/2024